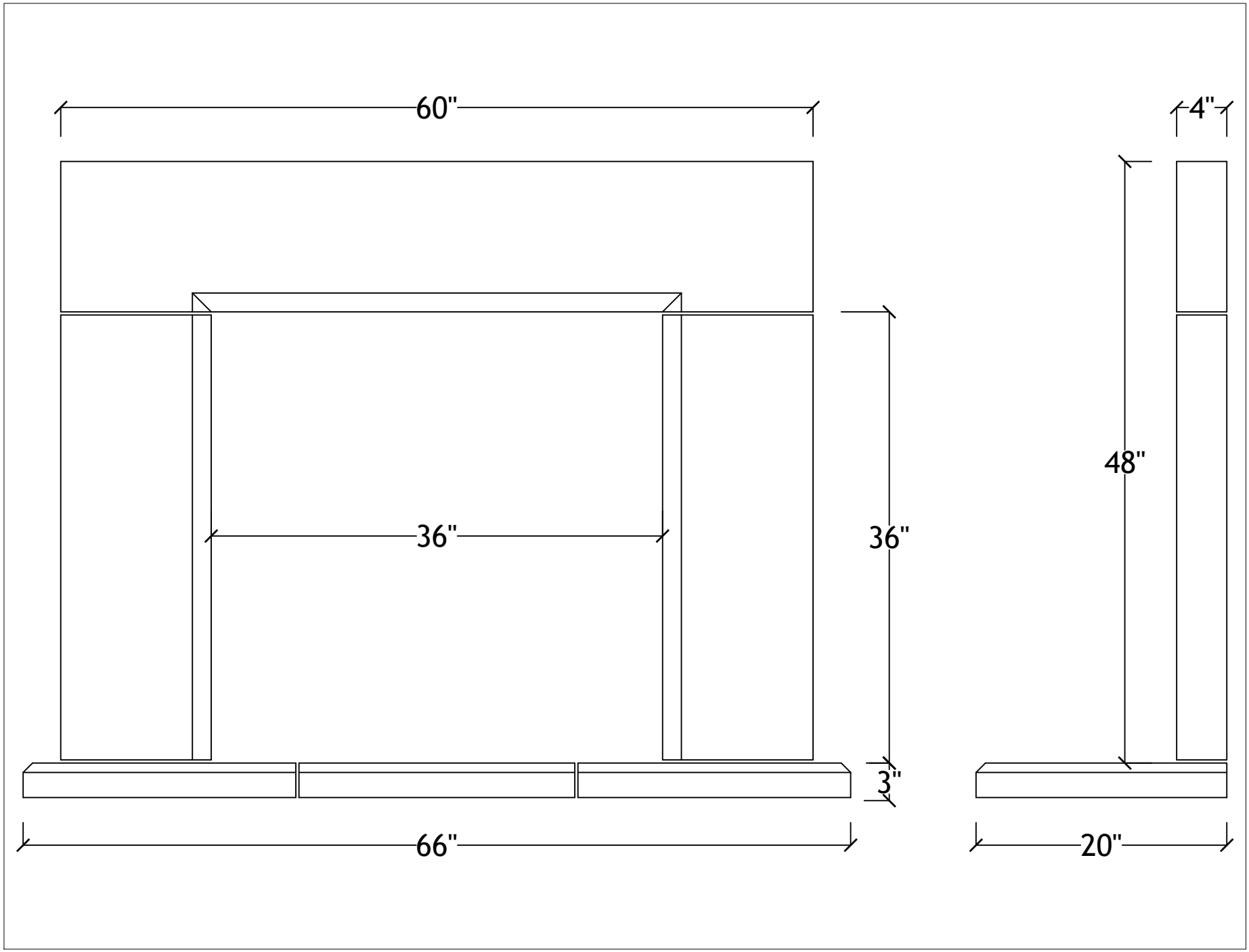

A
1

36" Uptown with hearth