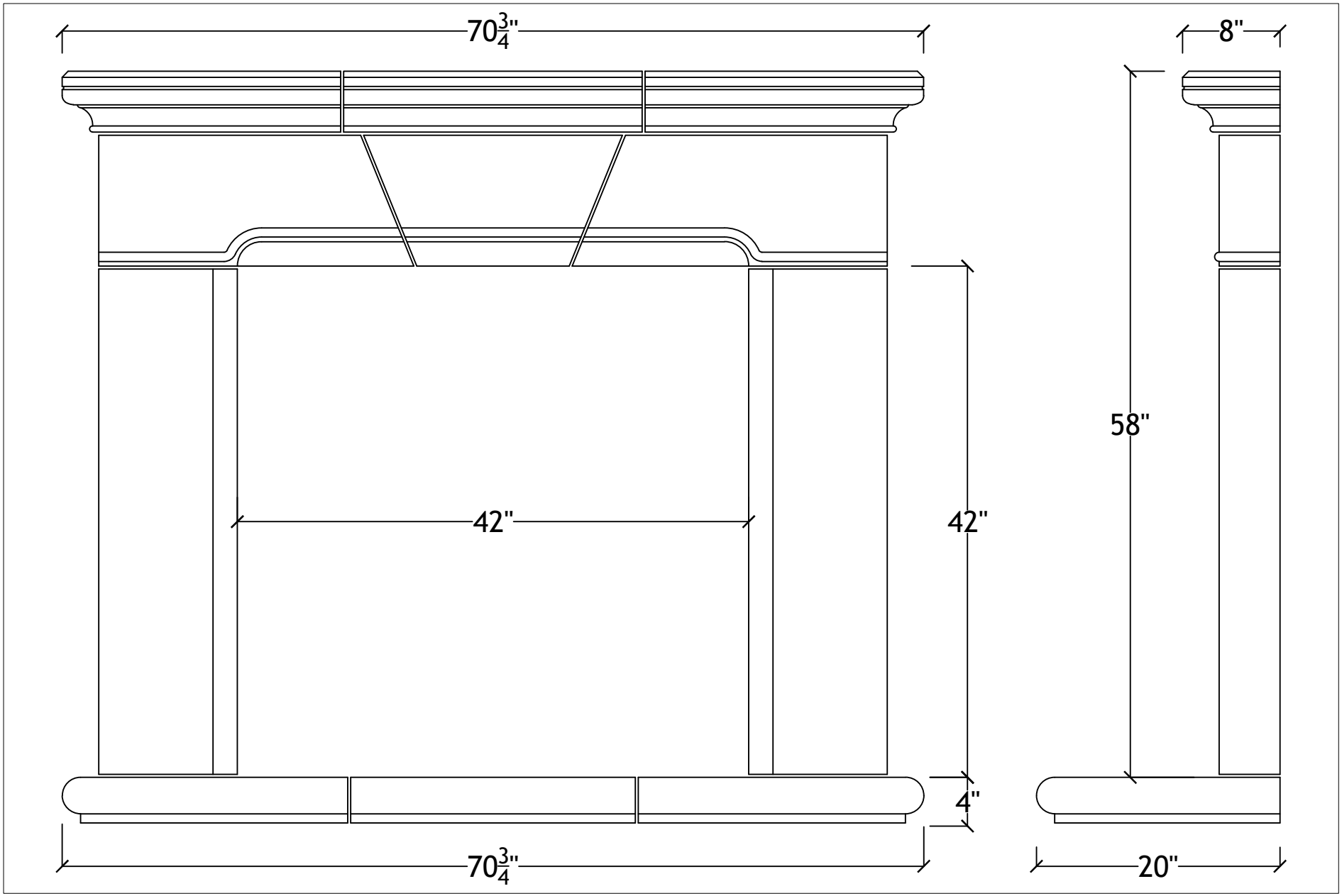

A
1

42" Conrad with bullnosed hearth