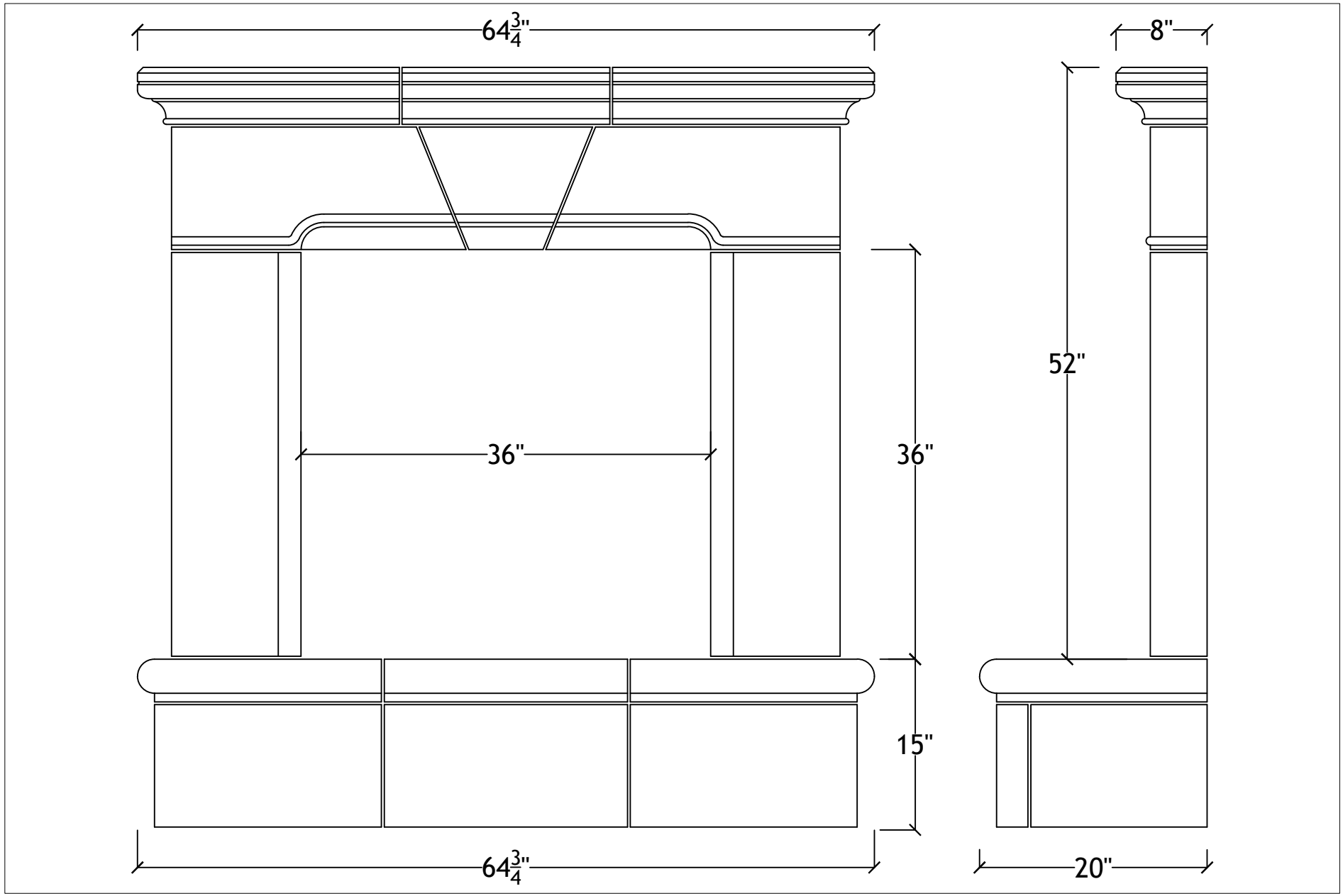

36" Conrad with raised bullnosed hearth

A
1